SL 580 Maxi

Indoor lift for heavy windows and panes

Multifunctional self-driven lifting device

Lifts and handles elements up to 1279 lb

The SL 580 Maxi is an agile and stable lifting device – excellent for easy lifting and moving of the heaviest window panes and sheets of glass.

The lifting capacity and precise movements of the Smartlift make the machine ideal for installation of e.g. heavy fire doors.

- Two vacuum circuits with two pumps
- Handy og compact
- Multifunctional
- Self-propelled
- Precise movements
- Labour-saving
- Improves work environment
- Tried-and-tested Danish quality

The SL 580 Maxi is increasingly used in industry for heavy lifting jobs.

Windows are kept securely in place throughout the installation process.

SmartLift® USA
9232 Gulfstream Road, Unit D
Frankfort, Illinois 60423
(815) 931-4825

Smart lift

SL 580 Maxi

The lifting device has a multifunctional swivel head.

The SL 580 Maxi can be shifted sideways up to 3.9 in for precision adjustment during the window installation process.

The Smartlift is easily transported in a van or on a trailer

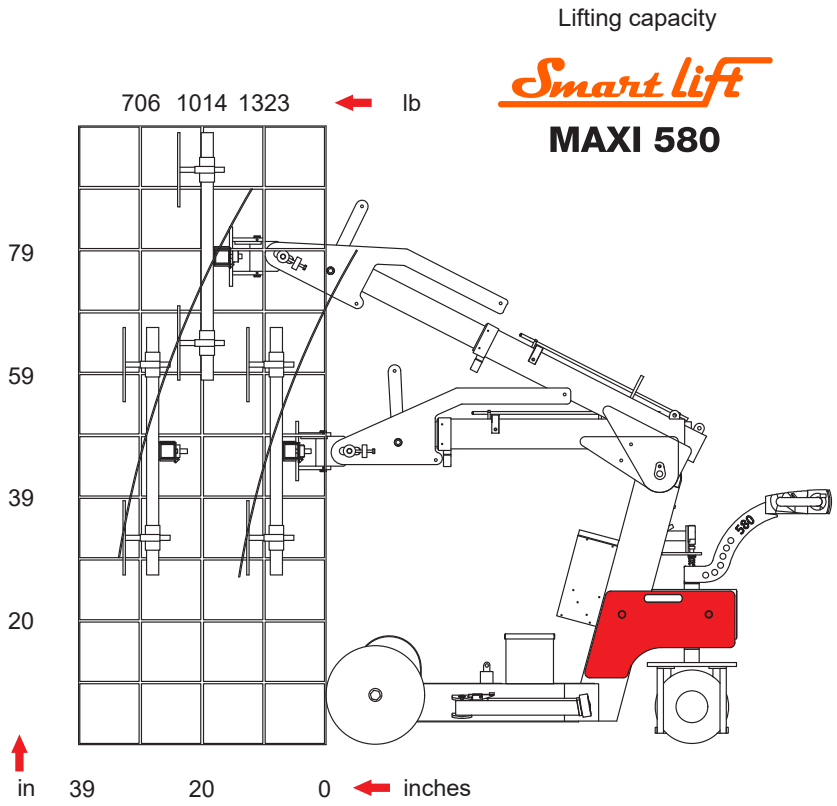

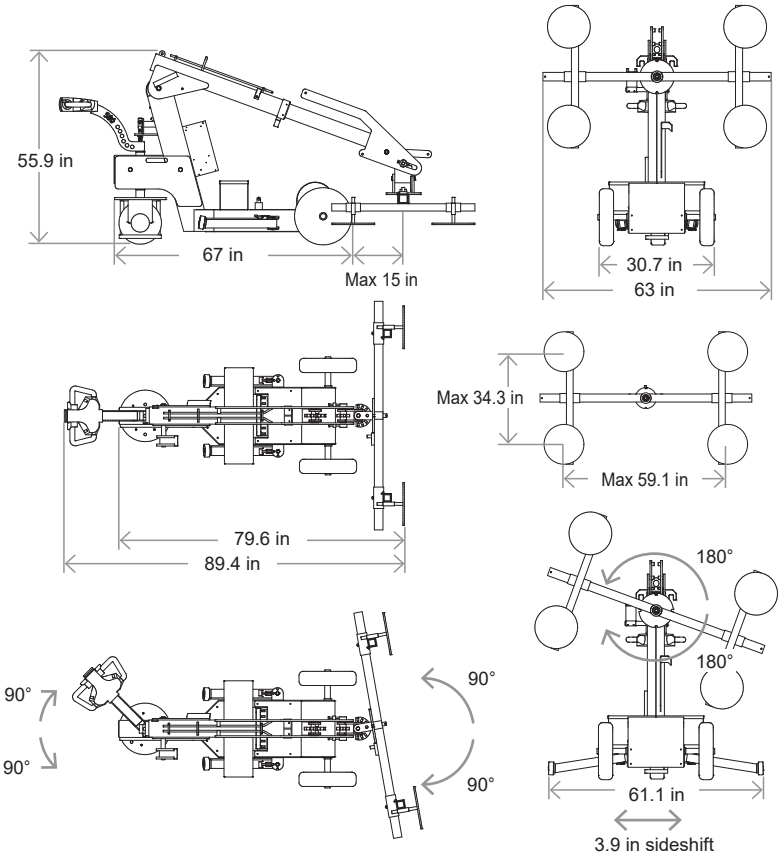

Technical data

Description	*Value*
Weight	1536 lb
Height	55.9 in
Width (min)	30.7 in
Length (min)	79.6 in
Extension of arm	19.7 in
Tip from horizontal	25° back/105° forward
Sideshift	3.9 in
Vacuum system	2 circuits
Chargingvoltage	115 volt
Integrated charger	Blue Power 24/12
Chargingtime	Approx 8 hours
Battery (2 x 12v) 24 volt	2 x 90 Ah
Runningperiod	Approx 30 hours
Rear-wheel drive	1.341 hp
Suction pads	4 unit Ø 15.8 in

012018/1

SmartLift® USA
9232 Gulfstream Road, Unit D
Frankfort, Illinois 60423
(815) 931-4825

Smart lift